LumEfficient

OPENLUX SERIES

HIGH BAY LIGHTING

FEATURING LIGHT EMITTING DIODE (LED)

Benefits

- Open ring heat dissipation
- Samsung 2835 LED chips, Inventronics LED driver
- 130lm/w, 50,000hrs, 1-10V dimming is available
- Optional PIR sensor and microwave sensor

Application Areas

- Workshop
- Warehouse
- Exhibition Hall
- Stadium
- Airport
- Railway
- Station
- Supermarket

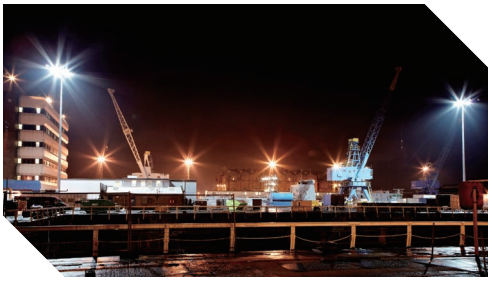

Compliance

- UL1598A for marine grade environments
- 3G bridge and overpass vibration standards (per ANSI C136.31 – 2001)
- 10kV surge suppression in accordance to IEEE/ANSI C62.41.2

c UL us LISTED

DLC QPL LISTED

IP66

OUR SERVICES Site Evaluation Application Consulting Installation Support

LumEfficient
Resilient LED

INFO@LUMEFFICIENT.COM / WWW.LUMEFFICIENT.COM

Subject to Change
v. 1905

Openlux Series

HIGH BAY LIGHTING

FEATURES	
Input Voltage	AC100-277V
Lighting Efficiency	130LM/W
Color Rendering Index	Ra>80
Operating Temperature	-40°F~122°F
Storage Temperature	-40°F~158°F
Life Span	≥50000H
Lamp Shell	White
Dimming	1-10V

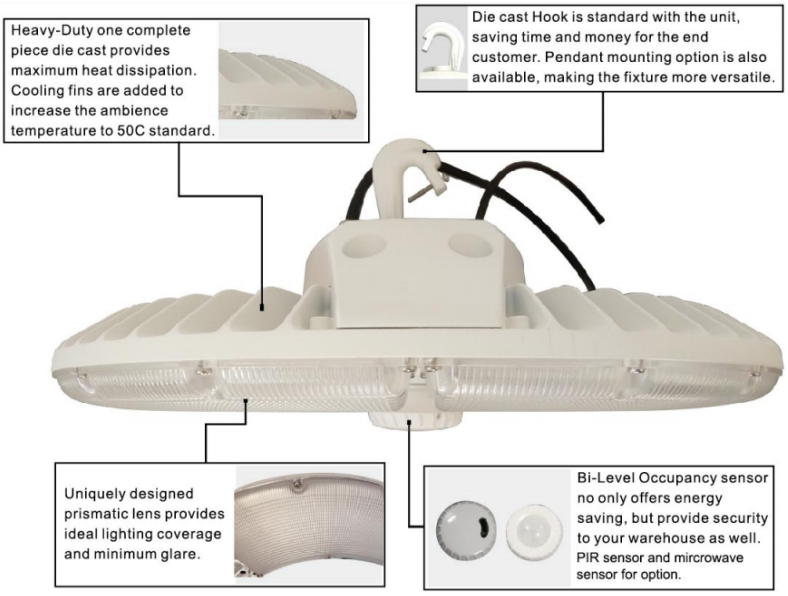

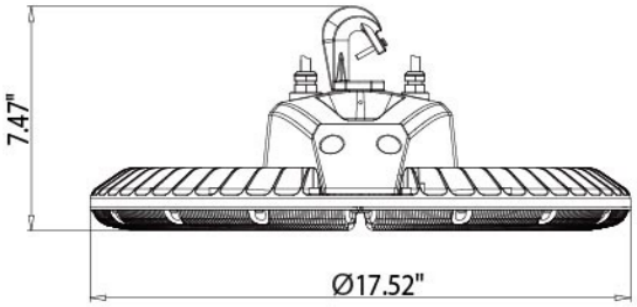

(100W/150W/200W/240W)

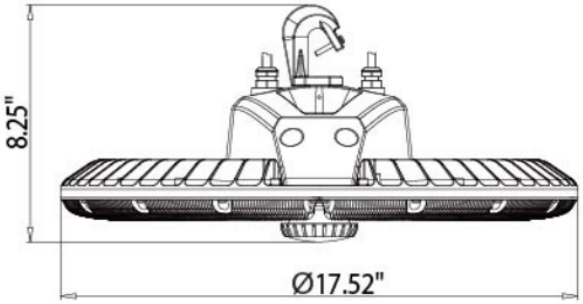

(100W/150W/200W/240W)

ORDERING OPTIONS

Sample Order Code: ***OPL-150W-550-D1-PCD-VI-HK-W***

Family	Wattage	Optics	Color Temp.	Control	Lens	Lens Type	Mounting	Light Beam	Options	Voltage
OPL	240W 200W 150W 100W	(5)	(40) 4,000K (50) 5,000K (57) 5,700K (65) 6,500K	(D1) 1-10V Dimming (D2) PIR Sensor (D3) Microwave Sensor	(PC) PC	(D) Diffuse	(HK) Hook	(W) 120°	(C6) 6ft Cord (C12) 12ft Cord (Lxxxx) LX-XX Nema Twistlock	(V1) 100-277V (V2) 277-480V

LumEfficient
Resilient LED

INFO@LUMEFFICIENT.COM / WWW.LUMEFFICIENT.COM